CRYSTAL OSCILLATOR

SPXO

SG - 550 series

- Frequency range : 1 MHz to 48 MHz
- Supply voltage : 1.8 V Typ. / 2.5 V Typ. / 3.3 V Typ.
- Current consumption : SEF1.8 V No load condition 48 MHz 1.5 mA Typ.
- Function : Standby($\overline{ST}$)
- Thickness : 1.2 mm Max.

Actual size

Specifications (characteristics)

Item		Symbol	Specifications				Remarks	
			SG-550SEF	SG-550SDF	SG-550SCF	SG-550SCG		
Output frequency range		f_0	2 MHz to 48 MHz			1 MHz to 48 MHz		
Supply voltage		V_{CC}	1.8 V Typ. 1.6 V to 2.2 V	2.5 V Typ. 2.2 V to 3.0 V	3.3 V Typ. 2.7 V to 3.6 V			
Temperature range	Storage temperature	T_stg	-40 °C to +125 °C				Store as bare product after unpacking	
	Operating temperature	T_use	-40 °C to +85 °C					
Frequency tolerance		F_tol(osc)	B: $\pm 50 \times 10^{-6}$,C: $\pm 100 \times 10^{-6}$			—	-20 °C to +70 °C	
			M: $\pm 100 \times 10^{-6}$			—	-40 °C to +85 °C	
			—			S: $\pm 25 \times 10^{-6}$	-20 °C to +70 °C	V_{CC} ±5 %
			L: $\pm 50 \times 10^{-6}$			—	-40 °C to +85 °C	
Current consumption		I_{CC}	1.5 mA Max.	1.5 mA Max.	1.5 mA Max.	—	No load condition, 2 MHz≤f_0≤ 4 MHz	
			1.5 mA Max.	1.5 mA Max.	2.0 mA Max.	—	No load condition, 4 MHz<f_0≤ 8 MHz	
			1.5 mA Max.	2.0 mA Max.	2.5 mA Max.	—	No load condition, 8 MHz<f_0≤16 MHz	
			2.0 mA Max.	2.0 mA Max.	2.5 mA Max.	—	No load condition, 16 MHz<f_0≤25 MHz	
			2.0 mA Max.	2.5 mA Max.	3.5 mA Max.	—	No load condition, 25 MHz<f_0≤33 MHz	
			3.0 mA Max.	3.5 mA Max.	4.5 mA Max.	—	No load condition, 33 MHz<f_0≤48 MHz	
			—	—	—	12 mA Max.	No load condition, Max.frequency output.	
Stand-by current		I_std	0.7 µA Max.	1.5 µA Max.	2.0 µA Max.	50 µA Max.	$\overline{ST}$ =GND	
Symmetry		SYM	45 % to 55 %	45 % to 55 %		45 % to 55 %	1 MHz≤f_0≤16 MHz	50 % V_{CC} level L_CMOS ≤ 15 pF
			40 % to 60 %				16 MHz<f_0≤40 MHz	
				40 % to 60 %			40 MHz<f_0≤48 MHz	
High output voltage		V_{OH}	90 % V_{CC} Min.			V_{CC}-0.4 V Min.	I_{OH}=-3 mA(SEF, SDF, SCF), -8 mA(SCG)	
Low output voltage		V_{OL}	10 % V_{CC} Max.			0.4 V Max.	I_{OL}= 3 mA(SEF, SDF, SCF), 8 mA(SCG)	
Output load condition(CMOS)		L_CMOS	15 pF Max.					
Output enable / disable input voltage		V_{IH}	80 % V_{CC} Min.			70 % V_{CC} Min.	$\overline{ST}$ terminal	
		V_{IL}	20 % V_{CC} Max.					
Output rise and fall time		t_r / t_f	4 ns Max.				20 % V_{CC} to 80 % V_{CC} level, L_CMOS=15 pF	
Oscillation start up time		t_{osc}	10 ms Max.			12 ms Max.	t=0 at 90 % V_{CC}	
Frequency aging		F_aging	$\pm 5 \times 10^{-6}$ / year Max.			$\pm 10 \times 10^{-6}$ Max. 10 years	+25 °C, First year, V_{CC}=1.8 V, 2.5 V, 3.3 V	

External dimensions (Unit:mm)

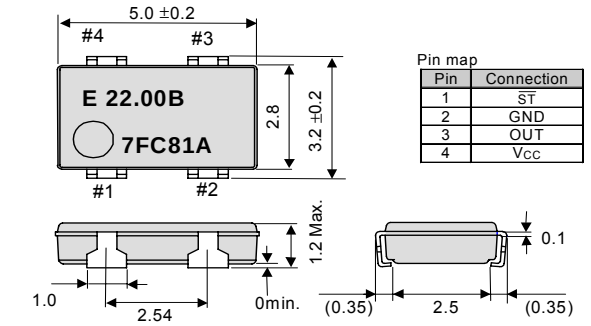

Pin map

Pin	Connection
1	$\overline{ST}$
2	GND
3	OUT
4	V_{CC}

Note.
$\overline{ST}$ pin
$\overline{ST}$ pin = HIGH or "open" : Specified frequency output.
$\overline{ST}$ pin = LOW : Output is low level (weak pull - down), oscillation stops.(SCG)/ High-z(SEF,SDF,SCF)

Metal may be exposed on the top or bottom of this product.
This will not affect any quality, reliability or electrical spec.

Footprint (Recommended) (Unit:mm)

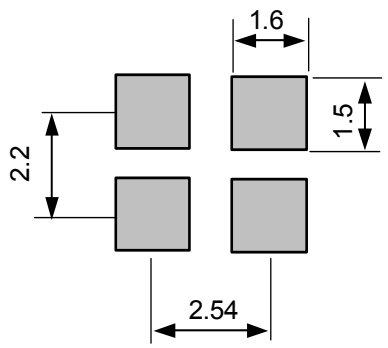

“3D STRATEGY” EPSON TOYOCOM

In order to meet customer needs in a rapidly advancing digital, broadband and ubiquitous society, we are committed to offering products that are one step ahead of the market and a rank above the rest in quality. To achieve our goals, we follow a “3D (three device) strategy” designed to drive both horizontal and vertical growth. We will to grow our three device categories of “Timing Devices”, ”Sensing Devices” and “Optical Devices”, and expand vertical growth through a combination of products from these categories.

Quartz devices have become crucial in the network environment where products are increasingly intended for broadband, ubiquitous applications and where various types of terminals can transfer information almost immediately via LAN and WAN on a global scale. Epson Toyocom Corporation addresses every single aspect within a network environment. The new corporation offers “Digital Convergence” solutions to problems arising with products for consumer use, such as, core network systems and automotive systems.

PROMOTION OF ENVIRONMENTAL MANAGEMENT SYSTEM CONFORMING TO INTERNATIONAL STANDARDS

At Epson Toyocom, all environmental initiatives operate under the Plan-Do-Check-Action(PDCA) cycle designed to achieve continuous improvements.
The environmental management system (EMS) operates under the ISO 14001 environmental management standard.
All of our major manufacturing and non-manufacturing sites, in Japan and overseas, completed the acquisition of ISO 14001 certification.
In the future, new group companies will be expected to acquire the certification around the third year of operations.

ISO 14000 is an international standard for environmental management that was established by the International Standards Organization in 1996 against the background of growing concern regarding global warming, destruction of the ozone layer, and global deforestation.

WORKING FOR HIGH QUALITY

Epson Toyocom quickly began working to acquire company-wide ISO 9000 series certification, and has acquired ISO 9001 or ISO 9002 certification for all targeted products manufactured in Japanese and overseas plants.
Epson Toyocom has acquired QS-9000 certification, which is of a higher level.
Also, TS 16949 certification, which is also of a higher level, has been acquired.

QS-9000 is an enhanced standard for quality assurance systems formulated by leading U.S.automobile manufacturers based on the international ISO 9000 series.

ISO/TS 16949 is a global standard based on QS-9000, a severe standard corresponding to the requirements from the automobile industry.